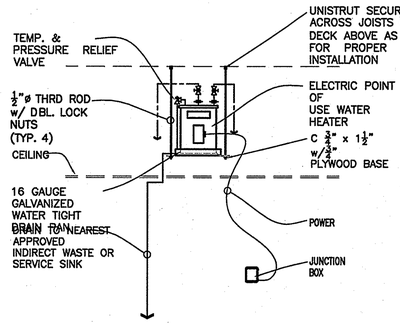

NOTE TO DESIGNER:
N.S.P.C. 10.16.7 REQUIRES: WHERE A HOT WATER STORAGE TANK OR INDIRECT WATER HEATER IS LOCATED AT AN ELEVATION ABOVE THE FIXTURE OUTLETS IN THE SYSTEM A VACUUM RELIEF VALVE SHALL BE INSTALLED ON THE STORAGE TANK.

3 / P5.1 ELECTRIC POINT OF USE WATER HEATERT DETAIL

INSTALLED IN CEILING
SEE SCHEDULE SHEET P5.1

NO SCALE
PLMB 1020

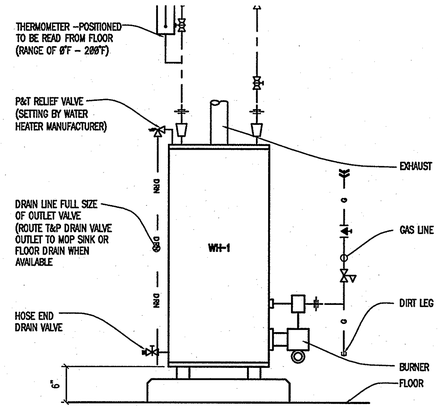

2 / P5.1 GAS WATER HEATER DETAIL

SEE SCHEDULE SHEET P5.1

NO SCALE
PLMB 1004

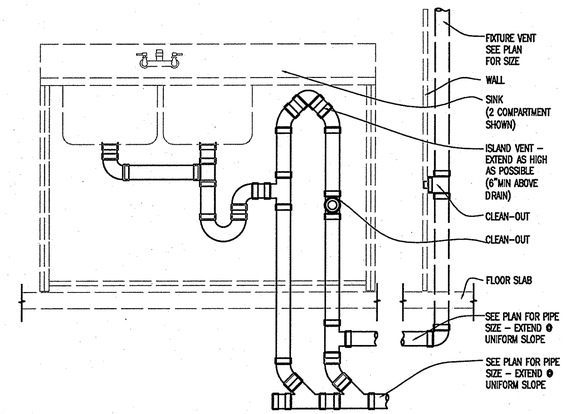

1 / P5.1 ISLAND VENT DETAIL

NO SCALE
PLMB 2015

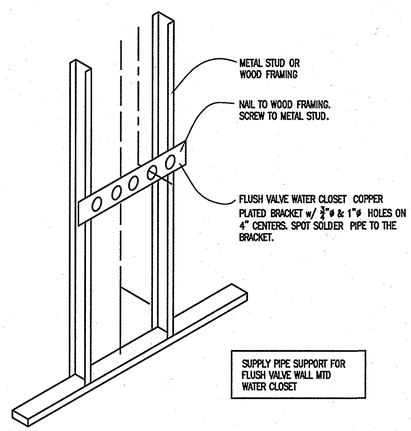

6 / P5.1 LAVATORY OR SINK PIPE SUPPORT DETAIL

NO SCALE
PLMB 1001

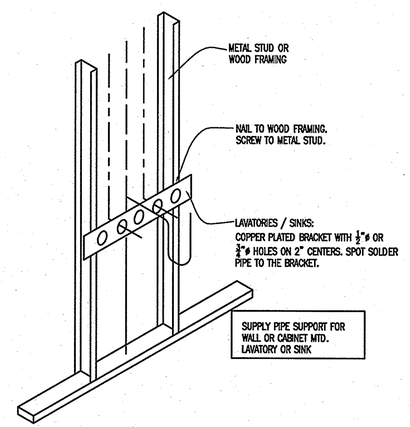

5 / P5.1 LAVATORY OR SINK PIPE SUPPORT DETAIL

NO SCALE
PLMB 1001

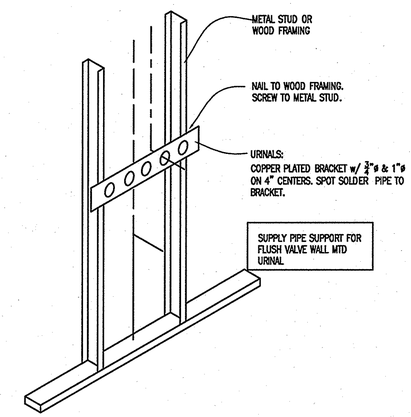

4 / P5.1 URINAL PIPE SUPPORT DETAIL

FLOOR MOUNTED TANK TYPE

NO SCALE
PLMB 1004

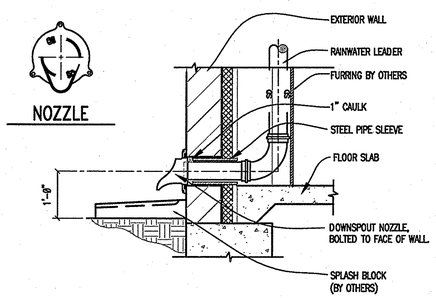

9 / P5.1 RAIN WATER LEADER DISCHARGE NOZZLE DETAIL

NO SCALE
PLMB 4003

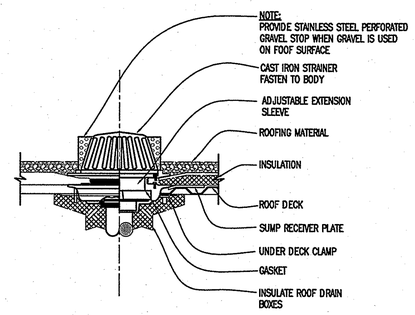

8 / P5.1 ADJUSTABLE ROOF DRAIN DETAIL

NO SCALE
PLMB 4001

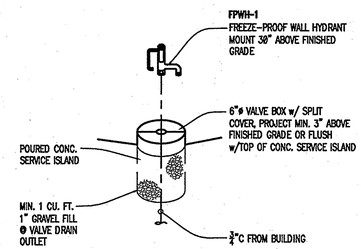

7 / P5.1 FREEZE PROOF WALL HYDRANT

NO SCALE
PLMB 2022

NEGEN ARCHITECTS
STUDIO 22517 178th Ave. Suite 200
Cold Spring, Minnesota 56320
TELEPHONE 320.685.3304
FACSIMILE 320.685.4039

CONSULTANTS

DUFFY ENGINEERING AND ASSOCIATES, INC.
STRUCTURAL - CIVIL - SURVEYING - MECHANICAL - ELECTRICAL
350 Highway 10 South Suite 101 St. Cloud, MN 56304
Phone: (320) 259-6575
Fax: (320) 259-6991
Email: mail@duffyeng.com

Mount Olivet Assembly of God
14201 Cedar Avenue South
Apple Valley, MN 55124
952.432.4332

REVISION	DATE

I hereby certify that this plan, specification or report was prepared by me or under my direct supervision and that I am a duly Licensed Engineer under the laws of the state of Minnesota.

Perry R. Nistler, P.E.

Date: 2-09-07 License No. 22468

PLUMBING SECTIONS & DETAILS

PROJECT NO.:	06752
SCALE:	AS NOTED
DATE:	2-09-07
DRAWN BY:	JRM
DRAWN BY:	PRN

P5.1

Duffy Project File: 27-06752-MP5.1